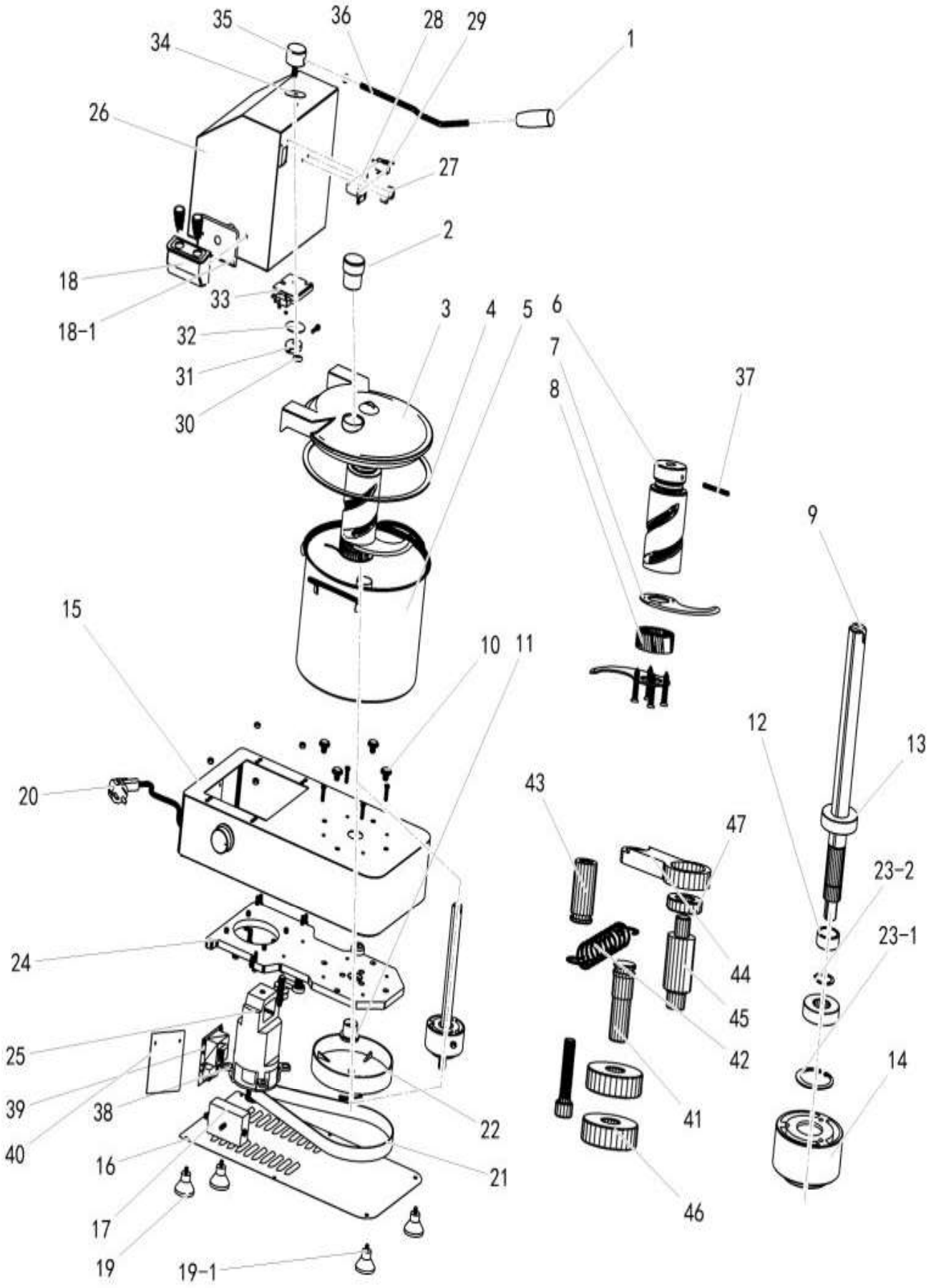EXPLODED DRAWING OF CUTTING MACHINE HR-6 & HR-9